Sapphire

External Range
Installation Manual

Fully Modulating Low NOx Boiler for Domestic Liquid Fuel Heating

Sapphire 6-32kW

Sapphire fully modulating liquid fuel boiler, operates via OpenTherm protocol
for smart connectivity, Intelligent flame detection functionality.
ErP and BED tested and approved.
Exceeds the 2018 ErP directive for NOx emissions.

UK CA UK NI CE

EOGB

Contents Page

Page

2 INFORMATION & GENERAL WARNINGS
- 2.0 Introduction 2
- 2.1 Symbols used in the manual 2
- 2.2 Delivery of the boiler 2
- 2.3 Guarantee and responsibility 2/3/4
- 2.4 Liquid fuel information 4
- 2.5 Product disclaimer statement 4

3 SAFETY AND PREVENTION
- 3.0 Introduction 5
- 3.1 Health and safety information 5

4 BOILER INTRODUCTION
- 4.1 How a condensing boiler works 6
- 4.2 Boiler description 6
- 4.3 Flue options 6
- 4.4 Boiler components
- 4.5 Frost Protection 6
- 4.6 Boiler and burner descriptions 7
- 4.7 Checking the characteristics of the boiler 8

5 TECHNICAL DATA
- 5.1 Technical boiler information 9
- 5.2 Technical boiler information (Sealed systems) 9
- 5.3 Boiler dimensions 10

6 BOILER INSTALLATION
- 6.1 Regulations compliance 11
- 6.2 Boiler location 11
- 6.3 Flue location 11
- 6.4 Ventilation 11
- 6.5 Air intake adaptor positions 12
- 6.6 Balanced flue 13/14/15

7 WATER CONNECTIONS
- 7.1 Installing the water connections 16

8 CONDENSATE TRAP / DISPOSAL
- 8.1 Condensate trap 17
- 8.2 Condensate route options with condensate pump (Not supplied as standard) 18
- 8.3 Not using the condensate pump 19
- 8.4 Condensate route options without condensate pump 19

9 FUEL SUPPLY AND STORAGE
- 9.1 Fuel pump 20
- 9.2 Connecting the fuel supply (1 pipe) 20
- 9.3 Connecting the fuel supply (2 pipe) 21
- 9.4 Pump warranty 21
- 9.5 Fuel storage 22
- 9.6 Fuel supply pipe sizing 22
- 9.7 Fuel line testing 23
- 9.8 Fuel filters 23
- 9.9 Fire Valve 23
- 9.10 Nozzle 23

10 SEALED SYSTEMS
- 10.1 Sealed system installation 24
- 10.2 System design consideration 24
- 10.3 Before you fill the system 24
- 10.4 Magnetic filtration 24
- 10.5 Filling the sealed system 25
- 10.6 Venting the circulating pump 25
- 10.7 3 bar pressure relief valve 25

11 ELECTRICAL
- 11.1 General 26
- 11.2 Connecting the power supply 26
- 11.3 OpenTherm controls 26
- 11.4 OpenTherm wiring 26
- 11.5 Modulating circulating pump (wiring) 27

12 PRODUCT FICHE 28

13 END OF LIFE INFORMATION 29

Declaration

Sapphire

EOGB

Reliable energy. Flexible approach.

CE UK CA UK NI RoHS COMPLIANT

EC DECLARATION OF CONFORMITY

in accordance with BS EN ISO/IEC 17050-1:2004

We: EOGB Energy Products Ltd

Of: 5 Howard Road,
Eaton Socon,
St Neots,
Cambs,
PE19 8ET

Telephone: +44 (0)1480 477066
Email: sales@sapphireboilers.co.uk
Website: www.sapphireboilers.co.uk

Declare that;
Equipment: Sapphire Domestic Modulating Liquid Fuel Boiler
Model: Sapphire 6-32 kW

In accordance with the following Directives and Normative documents:

92/42/EC Conforms with the requirements of the Boiler Efficiency Directive.
2010/30/EU Conforms with the Labelling of Energy related products to EU (no) 811/2013
2009/125/EC Conforms with the Ecodesign of Energy related products to EU (no) 813/2013

I hereby declare that the equipment named above has been designed to comply with the relevant sections of the above standard and meets all essential requirements of the specified Directives.

Signed: Martin Cooke Signature

Position: Managing Director Date 1st October 2021

Information and General Warnings

2.0 Introduction

The Sapphire User Manual supplied with the boiler:

- Is an integral and essential part of the product and must not be separated from the boiler. It must therefore be kept carefully for any necessary consultation and must accompany the boiler even if it is transferred to another owner or user, or to another system. If the manual is lost or damaged, another copy can be requested from EOGB.
- Is designed for use by qualified personnel.
- Offers important indications and instructions relating to the installation safety, start-up, use and maintenance of the boiler.

2.1 Symbols used in the manual

In some parts of the manual you will see triangular DANGER signs. Pay great attention to these, as they indicate a situation of potential danger.

The dangers can be of 4 levels, as indicated below.

DANGER

This symbol indicates operations which, if not carried out correctly, cause serious injury, death or long-term health risks.

WARNING

This symbol indicates operations which, if not carried out correctly, may cause serious injury, death or long-term health risks.

CAUTION

This symbol indicates operations which, if not carried out correctly, may cause damage to the machine and/or injury to people.

DANGER

This symbol indicates operations which, if not carried out correctly, lead to electric shocks with lethal consequences.

2.2 Delivery of the appliance and the User Manual

This document should be kept safe and available for engineer if required.

- The boiler installer, must carefully inform the user about the use of the system;
- Any further tests that may be required before activating the complete installation;
- Maintenance, and the need to have the boiler and system checked at least once a year by a representative of the manufacturer or suitably qualified technician.

To ensure a periodic check, the manufacturer recommends entering into a Maintenance Contract.

2.3 Guarantee and responsibility

Thank you for purchasing the EOGB Energy Products Ltd fully modulating liquid fuel Sapphire condensing boiler.

EOGB Energy products Ltd guarantees the manufacture of the boiler including all electrical and mechanical components for a period of twelve months from the date of installation, provided that the boiler has been installed in full accordance with the installation and servicing instructions issued. This will be extended to a total period of 5 years for non-serviceable parts, and 25 years for the Heat Exchanger if the boiler is registered with EOGB Energy Products Ltd within thirty days of installation and it is serviced at twelve month intervals. See main Terms and Conditions below.

CAUTION

Registering the product with EOGB Energy Products Ltd
Please register your fully modulating liquid fuel Sapphire condensing boiler with EOGB Energy Products Ltd within thirty days of installation. To do so visit: www.sapphireboilers.co.uk

If your boiler should fail within the guarantee period, you must contact the Sapphire Agent who installed/commissioned the boiler who will arrange for the repair under the terms of the guarantee, providing that the boiler has been correctly installed, commissioned and serviced (if the boiler has been installed for more than twelve months) by a competent person and the fault is not due to tampering, running out of liquid fuel, liquid fuel contamination, debris, system water contamination, misuse, trapped air or the failure of any external components not supplied by EOGB Energy Products Ltd, e.g. fire valve, motorised valve, etc.

Information and General Warnings

In the first instance
Contact the Sapphire Agent who installed and commissioned the boiler to ensure that the fault does not lie with the system components or any incorrect setting of the system controls that falls outside of the manufacturer's guarantee otherwise a service charge could result. EOGB Energy Products Ltd will not be liable for any charges arising from this process.

If a fault covered by the manufacturer's guarantee is found
Ask your Sapphire Agent to contact EOGB Energy Products Ltd Service Department on +44 (0)1480 477066 who will arrange for a competent service engineer to rectify the fault.

Remember - before you contact EOGB Energy Products Ltd
• Ensure the boiler has been installed, commissioned and serviced by a Sapphire Approved Agent and in accordance with the installation and servicing instructions.
• Ensure there is liquid fuel to supply the burner.
• Ensure the problem is not being caused by the heating system or its controls. Consult the boiler handbook for guidance.

Free of charge repairs
During the guarantee period no charge for parts or labour will be made provided that the boiler has been installed and commissioned correctly in accordance with the manufacturer's installation and servicing instructions, it was registered with EOGB Energy Products Ltd within thirty days of installation and for boilers over twelve months old, full details and reports of annual service is available on request.
.
The following documents must be made available to EOGB Energy Products Ltd Limited on request:
• Proof of purchase
• CD10 Installation Completion Form (or equivalent document)
• CD11 Commissioning Report Form (or equivalent document)
• Service documents (CD11 or equivalent document)

Chargeable repairs
A charge may be made (if necessary following testing of parts) if the breakdown is due to any fault(s) caused by the plumbing or heating system, e.g. contamination of parts due to system contamination, sludge, scale, debris or trapped air. Refer to 'Extent of manufacturer's guarantee'.

Extent of manufacturer's guarantee
The manufacturer's guarantee does NOT cover the following:
• If the boiler has not been installed, commissioned, by a Sapphire Approved Agent in accordance with the installation and servicing instructions.
• Instances where the serial number has been removed or made illegible.
• Fault(s) due to accidental damage, tampering, unauthorised adjustment, neglect, misuse or operating the boiler contrary to the manufacturer's installation and servicing instructions.
• Damage due to external causes such as bad weather conditions (flood, storms, lightning, frost, snow, or ice), fire, explosion, accident or theft.
• Fault(s) due to incorrectly sized expansion vessel(s), incorrect vessel charge pressure or inadequate expansion on the system.
• Fault(s) caused by external electrics and external components not supplied by EOGB Energy Products Ltd
• Problems caused by lack of liquid fuel or faults with the fuel storage and supply system.
• Fault(s) due to contamination of the liquid fuel storage and supply system, e.g. water or debris.
• Bleeding or removing liquid fuel storage tank contamination or blockages from liquid fuel lines.
• Problems due to the flue system being incorrectly fitted or not installed to meet installation requirements.
• Boiler servicing, de-scaling or flushing.
• Cleaning out condensate traps/discharge pipes or thawing out frozen condensate pipework.
• Checking and replenishing system pressure.
• Liquid fuel supply pipelines, electrical cables and plugs, external controls not supplied by EOGB Energy Products Ltd.
• Heating system components, such as radiators, pipes, fittings, pumps and valves not supplied by EOGB Energy Products Ltd.
• Instances where the appliance has been un-installed and reinstalled in another location.
• Use of spare parts not authorised by EOGB Energy Products Ltd
• Consumable items including, but not limited to, liquid fuel nozzles, liquid fuel hoses, gaskets and seals.

CAUTION

IMPORTANT
The nozzle supplied on the burner are only covered for the period up to the time of the first service (twelve months). and must be changed on the first service and on every annual service thereafter.

CAUTION

IMPORTANT
A suitable liquid fuel filter with a minimum 15µ filtration must be installed in the liquid fuel supply line.
Do not wait until the fuel supply runs out before you re-order. Sludge in the bottom of the tank may be drawn into the fuel lines.
It is recommended that the boiler is switched off when the new liquid fuel supply is delivered and that the fuel is allowed to settle for an hour before restarting the boiler.

Terms of manufacturer's guarantee
• The Company shall mean EOGB Energy Products ltd.
• The boiler must be installed by a Sapphire approved agent and in full accordance with the relevant Codes of Practice, Regulations and Legislation in force at the time of installation.
• The boiler is guaranteed for 5 years from the date of installation for non-serviceable parts and 25 years for the Heat Exchanger, providing that every twelve months the annual service has been completed and the boiler registered with the Company within thirty days of installation. Any work undertaken must be authorised by the Company and carried out by a Sapphire approved service engineer.

Information and General Warnings

• This guarantee will be invalid if the boiler does not have an annual (every twelve month) service and will then be limited to twelve months from the date of installation.
• The heat exchanger of the boiler is covered by a 25 year parts and labour guarantee from the date of installation. This is subject to the following:
• The boiler is operated correctly, in accordance with the Installation and servicing instructions.
•EOGB Energy products Ltd strongly recommends that a in-line magnetic filter/s is fitted in the heating system pipework. This should be installed and regularly serviced in accordance with the filter manufacturer's instructions. We reserve the right to ask for proof of installation – failure to provide this may result in the guarantee becoming invalid.
• Proof is provided that the system has been flushed or chemically cleaned where appropriate (refer to BS 7593) and that the required quantity of a suitable corrosion inhibitor added.
• Proof of annual servicing (including the checking of any expansion vessels and pressure relief valves) must be provided if and when requested by the Company.
• This guarantee does not cover breakdowns caused by incorrect installation, neglect, misuse, accident or failure to operate the boiler in accordance with the manufacturer's installation and servicing instructions.
• The boiler is registered with the Company within thirty days of installation. Failure to do so does not affect your statutory rights.
.• The balance of the guarantee is transferable providing the installation is serviced prior to the dwelling's new owners taking up residence. EOGB Energy Products Ltd must be informed of the new owner's details.
• The Company will endeavour to provide prompt service in the unlikely event of a problem occurring, but cannot be held responsible for any consequences of delay however caused.
• This guarantee applies to EOGB Energy Products Ltd boilers purchased and installed on the UK mainland, Isle of Wight, Channel Islands, Isle of Man and Scottish Isles only. Provision of in-guarantee cover elsewhere in the UK is subject to agreement with the Company.
• All claims under this guarantee must be made to the Company prior to any work being undertaken. Invoices for call out/repair work by any third party will not be accepted unless previously authorised by the Company.
• Proof of purchase and date of installation, commissioning and service documents must be provided on request.
• If a replacement boiler is supplied under the guarantee (due to a manufacturing fault) the product guarantee continues from the installation date of the original boiler and not from the installation date of the replacement..
• The boiler must be connected to a mains water supply (installations utilising a private water supply are not covered by this guarantee).
• Breakdown/failure due to lime scale will not be covered by this guarantee.
• The replacement of a boiler under this guarantee does not include any consequential costs, such as the removal or replacement of worktops, kitchen units, etc.
• The boiler (excluding external modules) must not be sited in a location where it may be subjected to frost.

2.4 Liquid fuel information and general instructions

To ensure consistency, the supplier of the fuel must be able to demonstrate that the fuel supplied is in conformity with the liquid fuel standard stated in this manual and compliance with a recognised Quality Control and management system to ensure high standards are maintained within the storage, blending and delivery processes.

The installation of a liquid fuel storage tank and its ancillaries must also be prepared BEFORE liquid fuel is introduced.. Checks and preparation should include:

• For new installations, make sure that all materials and seals in the liquid fuel storage and supply line to the burner are compatible with the liquid fuel as stated in this manual. For all installations, there must be a good quality liquid fuel compatible liquid fuel strainer type filter at the tank with a micron rating of no more than 50 microns and then a secondary liquid fuel compatible paper type filter with a micron rating of 15 or less at the appliance end to protect the burner from contamination.
• If an existing liquid fuel storage tank is to be used then in addition to the materials checks as detailed above, it will be essential that the tank is first inspected for condition and checked for water or other contamination. EOGB strongly recommends that the existing tanks and their contents are cleaned via fuel polishing/conditioning and filters replaced prior to utilisation with the new boiler.
• EOGB recommends that the in line and burner fuel pump filters are inspected and if required replaced at least every 12 months during burner use, before the burner start-up following a long period of discontinue operation and even more frequently where contamination has occurred. Particular attention is needed when inspecting and checking for fuel leakages from seals, gaskets and hoses.

2.5 Product disclaimer statement

CAREFULLY READ THE FOLLOWING DISCLAIMER. YOU ACCEPT AND AGREE TO BE BOUND BY THIS DISCLAIMER BY PURCHASING EOGB BOILERS/ BURNERS AND/OR COMPONENTS.

Although the information and recommendations (hereinafter "Information") in this guidance is presented in good faith, believed to be correct and has been carefully checked, EOGB (and its subsidiaries) makes no representations or warranties as to the completeness or accuracy of the Information. Information is supplied upon the condition that the persons receiving will make their own determination as to its suitability for their purposes prior to use. In no event will EOGB (and its subsidiaries) be responsible for damages of any nature whatsoever resulting from the use of or reliance upon Information.

Other than set forth herein, EOGB (and its subsidiaries) makes no additional warranties with respect to the boiler/burner, either express or implied, including that of merchantability or fitness for a particular purpose or use.

In no event shall EOGB (and its subsidiaries) be liable for any indirect, incidental, special or consequential damages including, without limitation, loss of profits, damages for loss of business profits, business interruption, loss of business information, loss of equipment, or other pecuniary loss or compensation for services whether or not it is advised of the possibility of such damages.

With the exception of injuries to persons, EOGB's liability is limited to the customer's right to return defective/non-conforming products as provided by the relevant product warranty.

Safety and Prevention

3.0 Introduction

The boiler has been designed and built in compliance with current regulations and directives, applying the known technical rules of safety and envisaging potential danger situations. It is necessary, however, to bear in mind that the improper use of the equipment may lead to situations which could result in risk of the user or third parties, as well as to the health, safety and well-being to the boiler, burner or other items. Inattention, thoughtlessness and excessive confidence often cause accidents.
Please remember the following:

- The burner must only ever be used as expressly described. Any other use should be considered improper and therefore dangerous.
  In particular:
- It can be applied to boilers expressly named by the manufacturer, the type and pressure of the fuel, the voltage and frequency of the electrical power supply, the minimum and maximum ratings for which the burner has been regulated, the pressurisation of the combustion chamber, the dimensions of the combustion chamber and the room temperature must all be within the values indicated in the instruction manual.
- Modification of the burner to alter its performance and destinations is not permitted under any circumstances.
- The burner must be used in technically safe working conditions. Any disturbances that could compromise safety must be quickly eliminated.
- Opening or tampering with the burner components is not permitted, apart from the parts requiring maintenance.
- Only those parts detailed as available as spare parts by the manufacturer can be replaced.
- Only liquid fuel as specified specifically for this make and model of appliance can be utilised.

3.1 Health and safety information

The installer should be aware of their responsibilities under the current, local Health and Safety at Work Act. The interest of safety is best served if the boiler is installed by a competent, qualified engineer, OFTEC trained and registered. If not, a Building Notice is required in England & Wales. Other parts of the British Isles, including the Channel Islands, also require notification to building control.

DANGER

Please note that the installation, commissioning and servicing MUST only be carried out by a competent, qualified engineer, trained and registered to generic industry standards of competence and who has undertaken additional EOGB manufacturers appliance and burner specific training. In accordance with BS5410 part 1 2019.

Adhesives, sealants and paints used in the manufacture of the product are cured and present no known hazards when used in the manner for which they are intended The following other materials are present in the product:

INSULATION MATERIALS
Material Types: Ceramic fibre board, mineral wool
Description: Rigid board, slabs, sleeves, gaskets, ropes.
Known Hazards: May cause temporary irritation or rash to skin. High dust levels may irritate eyes and upper respiratory system.
Precautions: Avoid unnecessary or rough handling, or harsh abrasion of boards. Normal handling and use of material should not produce high dust levels. Avoid inhalation, and contact with skin and eyes. After handling always follow normal good hygiene practices.
Protection: Use disposable glove , face mask and eye protection.
First Aid: Eyes - If irritation occurs, wash eyes with copious amounts of water. If symptoms persist, seek immediate medical advice.
Skin- If irritation occurs, wash under running water before washing with soap and water.
Inhalation - Remove to fresh air, drink water to clear throat and blow nose to remove dust/fibres.
Ingestion - Drink plenty of water.

SEALANT AND ADHESIVE
Material Types: Silicone elastomer.
Description: Sealant and adhesive.
Known Hazards: Irritation to eyes.
Precautions: Avoid inhalation of vapour, contact with eyes and prolonged or repeated contact with skin. After handling always follow normal good hygiene practices.
Protection: Use eye protection. Rubber or plastic gloves should be worn where repeated contact occurs and a face mask worn when working in confined spaces.
First Aid: Eyes - Flush eyes with water for 15 minutes. Seek immediate medical attention.
Skin - Wipe off and wash with soap and water.
Inhalation - Remove to fresh air.

LIQUID FUELS
Known Hazards: - The effect of mineral oils on the skin vary according to the duration of exposure and the type of liquid fuel. The lighter fractions remove the protective grease naturally present on the skin, leaving it dry, liable to crack and more prone to damage by cuts, abrasions and irritant chemicals.
Skin rashes (Oil acne) most often on arms, but also on any part of the body in contact with oil or oily clothing.
Contact with fuel oils can cause dermatitis.
Precautions:
Avoid as far as possible any skin contact with mineral oil or with clothing contaminated with mineral oil. The use of a lanolin-based barrier cream is recommended, in conjunction with regular washing with soap and rinsing with water to ensure all oil is removed from the skin.
Take care to prevent clothing, especially underwear, from becoming contaminated with oil.
Do not put oily rags or tools in pockets, especially trouser pockets.
Have first-aid treatment at once for an injury, however slight.
Do not inhale any vapours from mineral oils.

For further information on all materials used on the Sapphire Boiler, please see the Material Safety Data Sheets (MSDS) section on our website www.sapphireboilers.co.uk

Boiler Introduction

4.1 How a Condensing Boiler Works

During the combustion process, hydrogen and oxygen combine to produce heat and water vapour. The water vapour produced is in the form of superheated steam in the heat exchanger. This superheated steam contains sensible heat (available heat) and latent heat (heat locked up in the flue gas). A conventional boiler cannot recover any of the latent heat and this energy is lost to the atmosphere through the flue. The EOGB Sapphire condensing boiler is designed to recover the latent heat normally lost by a conventional boiler. It does this by cooling the flue gases to below 90°C, thus extracting more sensible heat and some of the latent heat. This is achieved by cooling the flue gases to their dew point (approximately 55°C).

To ensure maximum efficiency, the boiler return temperature should be 55°C or less, this will enable the latent heat to be condensed out of the flue gases.

To achieve maximum performance from the EOGB Sapphire boiler, it is recommended that the heating system is designed so that a temperature differential of 20°C between the flow and return is maintained. The use of modulating circulating pumps (now widely available) and effective control systems are essential for optimum fuel efficiency savings and the limitation of unnecessary emissions to atmosphere.

4.2 Boiler Description

The EOGB Sapphire Modulating liquid fuel boiler have been designed for use with a fully pumped central heating system with indirect domestic hot water cylinder.

WARNING

They are not suitable for use with either a direct cylinder or a 'primatic' cylinder or gravity hot water.

The boilers are suitable for use on open vented or sealed central heating systems.

The EOGB Sapphire boilers are supplied with the control panel and burner factory fitted.

4.3 Flue Options

WARNING

EOGB advises that EOGB approved balanced flues are to be used with the EOGB Sapphire boiler.

Please see separate supplied flue option manual for more information on flues

4.4 Boiler Components

All boilers are pre-set for use with the intended specified fuel and are supplied to accept a one pipe fuel supply system as standard. Please note that the boiler is supplied with a 2 pipe loop system in which a single pipe feed will connect to and if required can be converted to accept a two pipe fuel supply system either by a de-aerator or supply back to the fuel tank.

The boiler is fitted with a primary & secondary manual reset overheat thermostat (which allows it to be used on a sealed central heating system) which will automatically switch off the boiler if it exceeds a pre-set temperature of 95°C ± 3°C for the primary overheat thermostat & 110°C ± 3°C for the secondary overheat thermostat.

The boiler control panel is fitted with an ON/OFF switch and LCD display. The temperature of the water leaving the boiler to heat the radiators and hot water cylinder is automatically controlled and will require to be pre-set to satisfy the system requirements by an approved Sapphire Service Engineer

4.5 Frost Protection

The Sapphire boiler has frost protection built into it's firmware in 3 different states -

No Frost - Heat exchanger water temp above 10°C - Boiler will act dependant on heat load required

Pre-Frost - Water temp fallen below 9°C -- Circulation Pump will start to move the water around the system.

Frost - Water temp fallen to 0°C - Boiler will fire until water temp is above 10°C

Please note that MOST smart Opentherm controls have frost protection, this will be operated before the sapphires frost protection would be needed.

Boiler Introduction

Fig. 1

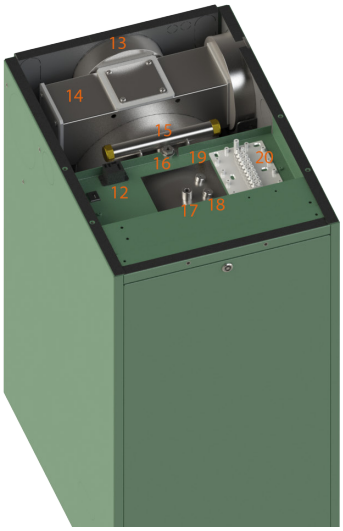

Fig. 2

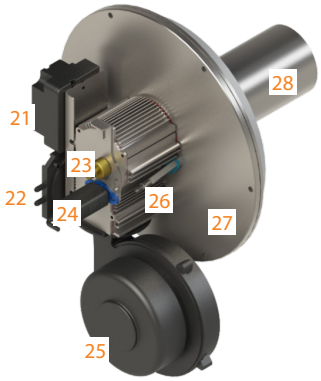

Fig.3

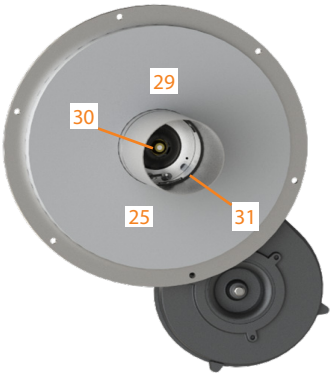

Fig. 4

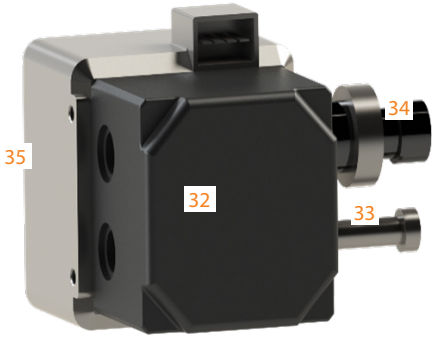

Fig. 5

1 - Modulating Fuel Pump
2 - Burner Plug
3 - Burner Plug
4 - LCD Display
5 - On/Off Switch
6 - Modulating Sapphire Burner
7 - Heat Exchanger
8 - PCB Board Housing
9 - Drain Cock
10 - Return Connection (3/4" BSP)
11 - Condensate Trap
12 - Switch Live Controls Relay
13 - Air Damper Adaptor
14 - Flue Manifold
15 - Flow Connection (2 x 3/4")
16 - Temperature Thermowell
17 - Air Vent Port (1/8")
18 - Primary Overheat Thermostat
19 - Secondary Overheat Thermostat
20 - EOGB Sapphire Wiring Case
21 - EBI Transformer
22 - Air Pressure Switch
23 - Nozzle Assembly
24 - KLC Flame Scanner (24v)
25 - Inverter Driven Fan Motor
26 - Electrodes
27 - Burner to Boiler Flange Plate
28 - Blast Tube
29 - Burner to Boiler Gasket
30 - Atomising Nozzle
31 - Sight Glass
32 - Danfoss BFPM61 Pump
33 - Solenoid Coil
34 - Pressure Transducer
35 - Pump Motor

4.8 Checking the characteristics of the boiler

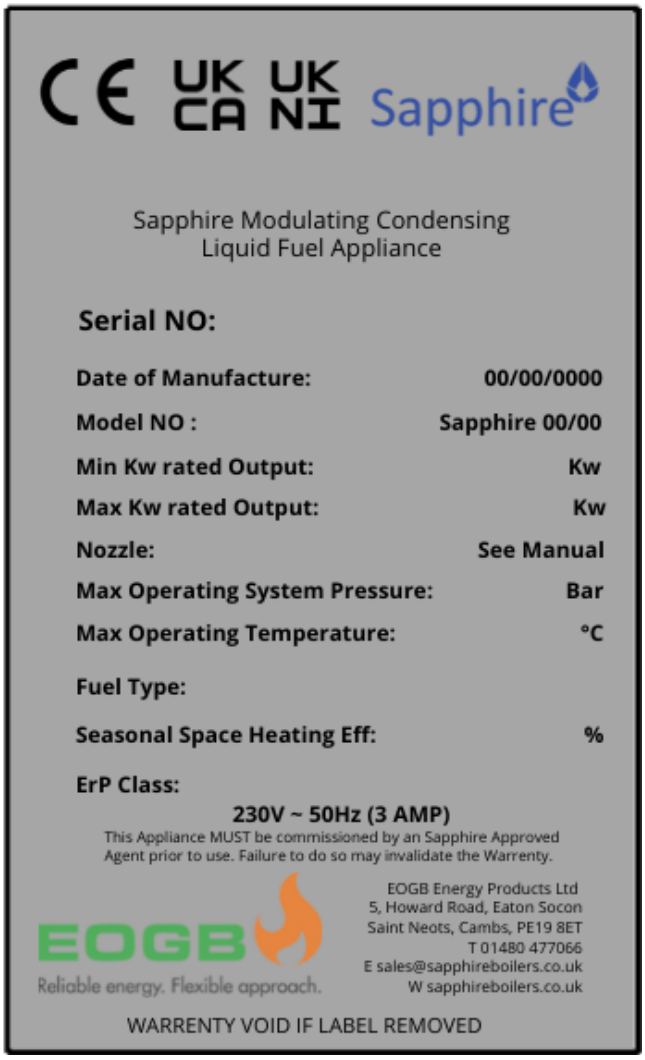

Fig. 6

Technical Data

5.1 Technical Boiler information

		EOGB Sapphire 6 - 32kW
Water Content	Litre	62
* Weight (Dry) Heat Exchanger	Kg	46
* Weight (Dry) Overall	Kg	88
Max. Heat output (Kerosene)	kW	32
Min. Heat output (Kerosene)	kW	6
Flow Connection	mm	22
Return Connection	mm	22
Condensate connection	mm	22
Flue diameter	mm	81
Maximum static head	m	7.2
Minimum circulating head	m	0.5
Boiler thermostat range	°C	Variable
Primary Limit Thermostat (safety shut off temp)	°C	95 +/-3 °C
Secondary Limit Thermostat (safety shut off temp)	°C	110 +/-3 °C
Maximum hearth temperature	°C	100
Electrical supply	Volts	1ph-230-50Hz
Total Consumption	kWh	0.66
Oil connection		Dependant on installation
Max operating pressure - sealed system	bar	3

Table 1

* Weight includes burner but excludes flue.

5.2 Technical Boiler information (Sealed System)

Heating system pressure (cold)	Calculated depending on system size Refer to the "Domestic Heating Design Guide"
Operating pressure of pressure relief valve	3 bar
Expansion vessel size	Calculated depending on system size Refer to the "Domestic Heating Design Guide"

Table 2

5.3 Boiler Dimensions

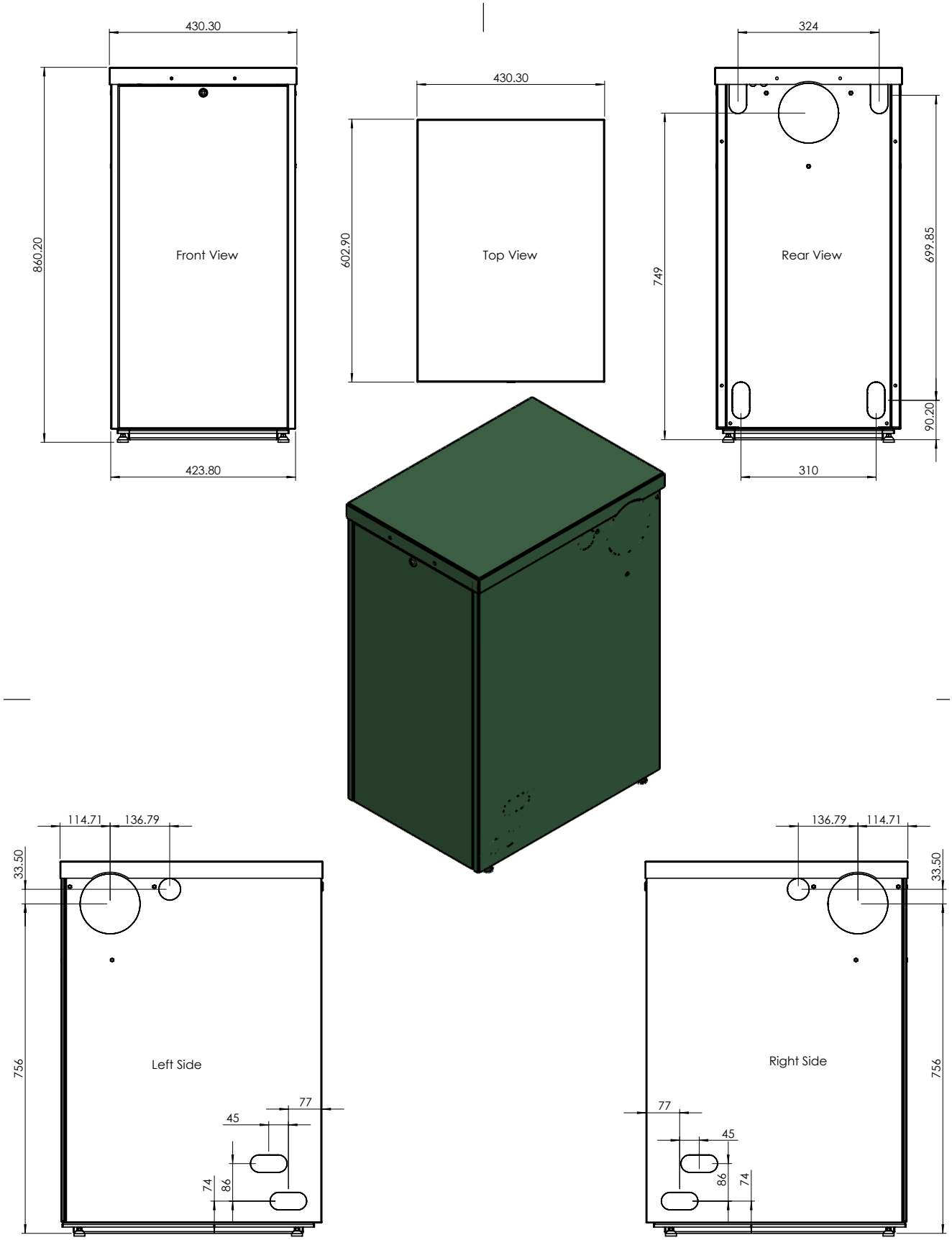

Fig.7

ALL DIMENSIONS IN THE DIAGRAMS ABOVE ARE IN MILLIMETRES

Boiler Installation

6.1 Regulations Compliance

The Installation of an EOGB Sapphire boiler must be in accordance with the following recommendations:

- Regional Building Regulations such as the Building Regulations for England and Wales, the Building Standards for Scotland etc and any local Bye-laws which you must check with the local authority for the area
- Model and local Water Undertaking Bye-laws.
- Regional Control of Pollution Regulations.

Further information may be obtained from BS 5410 Part 1 for Domestic or Part 2 for non-domestic appliances

The installation should also be in accordance with the latest edition of the following British Standard Codes of Practice.

- BS EN 12828 Forced circulation hot water systems.
- BS 7593 Code of Practice for treatment of water in heating systems.
- BS 7671 Requirements for electrical installations, IEE Wiring Regulations.

WARNING

Failure to install and commission appliances correctly can invalidate the warranty.

Before starting any work on the boiler, or fuel supply please read the health and safety information given on page 5.

6.2 Boiler Location

Before fitting the boiler, ensure it will be located on a firm and level surface. If required, the boiler level can be adjusted using adjustment legs located at the front of the boiler.
No special hearth is required as the boiler has its own integral impervious steel base tray and air gap..

Also ensure that there will be enough clearance around the sides and rear of the boiler to allow for the boiler to be manoeuvred into position and to provide additional ventilation, EOGB Advise a minimum of a 10mm gap around the sides and rear of the boiler. (Note, depending on which flue exit options is used, some additional clearances may be required. (Please see separate "EOGB Sapphire Boiler Flue instructions" for minimum gap clearances).

CAUTION

As the boiler is serviced from the front, a minimum clearance of 750mm must also be provided in front of the appliance.

Sound levels must also be considered, please consider the following to ensure the appliance does not emit unwanted noise levels.

1. Avoid locating the boiler on tiled surfaces where possible, tiles will amplify noise, particularly if the wall construction is hollow.
2. If a flue section passes through a bedroom, it is capable of transmitting noise.
3. Low level flue terminals can produce exhaust noise externally, this should be considered when sitting near an adjacent property.

Please see Fig 13b for guidance on Location

6.3 Flue location

Once a suitable boiler location has been determined, consideration to the boiler flue exit must be considered and checked. The EOGB Sapphire External boiler offers both sides and rear exit options however please refer to the "EOGB SAPPHIRE FLUE INSTRUCTIONS" provided in each flue kit.
For further info on flue options minimum clearances/dimensions, please refer to BS5410 Part 1(Domestic) / Part 2 (Non Domestic)

CAUTION

Please ensure that the flue location is in accordance with British Standards and Building regulation

6.4 Ventilation

A sufficient permanent air supply to the appliance should be provided if the boiler is installed in any confined space to prevent overheating of the appliance and any equipment in and near the appliance

Further details may be obtained from BS5410 Part 1 (Domestic) / Part 2 (Non Domestic)

Boiler Installation

6.5 Air Intake Adaptor Position, and Boiler Panel Access Knock-outs

The EOGB Sapphire air intake adaptor is supplied in the accessory box However to utilise the rear option, the exit flue knock-out in the rear panel would have to be removed, For this, please follow steps 1,2,3, & 9. If, however, a side exit is required (See Fig 9), then the air adaptor would also have to be repositioned. Please follow steps 1-11

1. Remove top access panel.
2. Loosen the rear/side panel securing bolts (see fig 8)
3. Remove the rear panel
4. Loosen the 4 x air intake adaptor securing bolts and remove the intake and gasket. (see fig 9)
5. Remove the chosen exit flue manifold sealing plate by removing the 4 x bolts, plate and gasket (see fig 11)
6. Re-fit the flue manifold sealing plate and gasket to the rear manifold exit.
7. Reroute the air intake ducting (as shown in FIG 9 for each exit option)
8. Then fit the air intake adaptor using the same 4 x securing bolts and gasket. (Ensure that the flue securing clamps have been fitted for the correct orientation (see Fig 9)
9. Then depending on the flue exits type required, the appropriate knock-outs can be removed. At the same time, access knock outs for the Flow, Return, Condensate and Fuel Supply lines can also be knocked out.(see Fig 10)
10. Refit the side, rear and top casing panels
11. Fit the balanced flue as per flue instructions

Fig.8

Fig.10

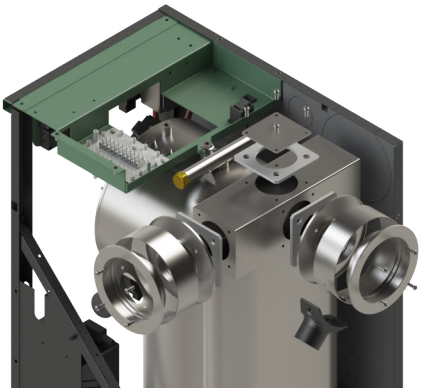

Fig.9

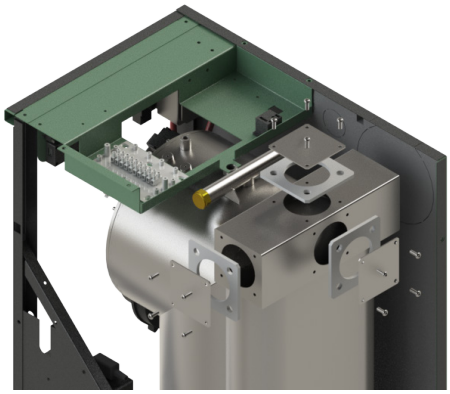

Fig.11

6.6 Balanced Flue

WARNING

Under no circumstances should EOGB Sapphire boilers be connected to existing flue or chimney systems. Only EOGB balanced flue systems and components should be used. Failure to install the correct type of flue system will invalidate the warranty.

EOGB Sapphire boilers have high operating efficiencies and low flue gas temperatures. Refer to the local applicable Building Regulations, BS5410 Part 1 (Domestic) / Part 2 (Non Domestic) for guidance on flue termination locations for safety and for the avoidance of plume nuisance.

The EOGB Sapphire boiler balanced flue provides options for side, rear or top flue entry. (see Figure 12 below)

Fig.12

Once the air intake adaptor has been fitted (see section "Air Intake Adaptor Position, and Boiler Panel Access Knock-outs")
Push the balanced flue section into the flue connection adapter, please ensure that the rubber flue seals are fitted and lubricated.
(Refer to EOGB Sapphire Boiler Flues Instructions for more info).

Ensure that once fitted, that the flue securing clamps located on the Air Intake Adaptor have been closed and secured (See Fig 13)

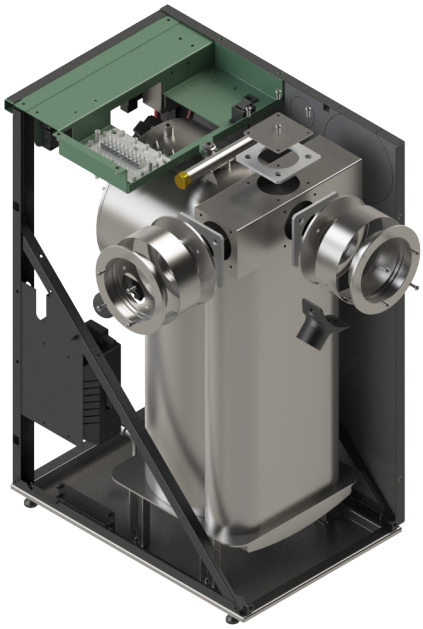

Fig.13a

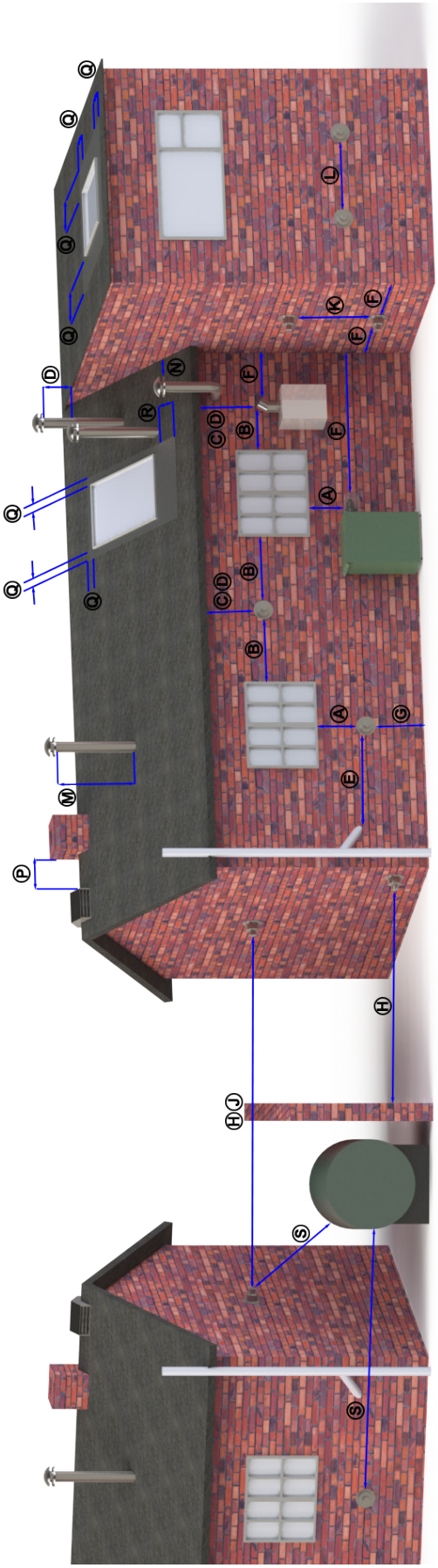

FIG 13b

Location		Appliance Burner Type	
		Pressure Jet Burner	
		Non-Condensing	Condensing
A	Directly below an opening, air brick,Opening window etc.	600	1000*
B	Horizontally to an opening, air brick, opening window etc.	600	1000*
C	Below a gutter, eaves, or balcony with protection.	75	1000*
D	Below a gutter or balcony without protection.	600	1000*
E	From vertical sanitary pipework	300	
F	From an internal or external corner, or a surface or boundary alongside the terminal.	300	
G	Above ground or balcony level.	300	
H	From a surface or boundary facing the terminal.	600	2500*
J	From a terminal facing the terminal.	1200	
K	Vertically from a terminal on the same wall.	1500	
L	Horizontally from a terminal on the same wall.	750	
M	Above the highest point an intersection with the roof.	600	
N	From a vertical structure to the side of the terminal.	750	
O	Above a vertical structure less than 750mm from the side of the terminal.	600	
P	From the ridge terminal to a vertical structure.	1500	
Q	Above or to the side of any opening on a flat or sloping roof.	600	
R	Below any opening on a sloping roof.	2000	

*** Recommended clearances to alleviate the effect of plume nuisance. Please see Oftec Technical Book 4 1.7 for further info.**
Grid referenced from Oftec technical book 4

Pipe Connections

7.1 Installing the Water Connections

The flow and return pipework can be routed to either side of the boiler or the rear, depending on the site requirements and direction of the flue system used. (See FIGS below)

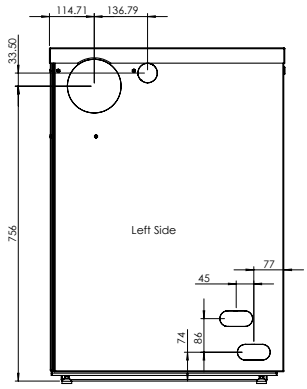

Fig.14

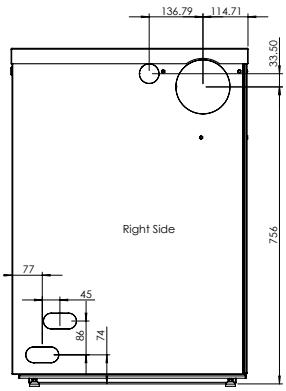

Fig.15

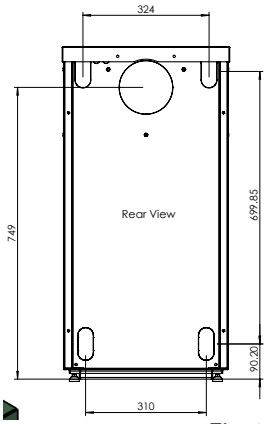

Fig.16

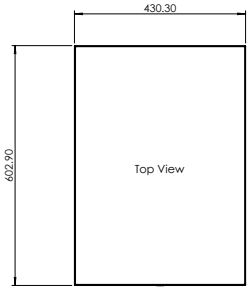

Fig.17

Flow Connections

The Flow connection can connect to either side of the boilers flow connection pipe via a 3/4" BSP connection (See Fig 18)

CAUTION

(Please ensure that the unused Flow connection is sealed using the 3/4" BSP end cap that is supplied with the appliance) (See Fig 19)

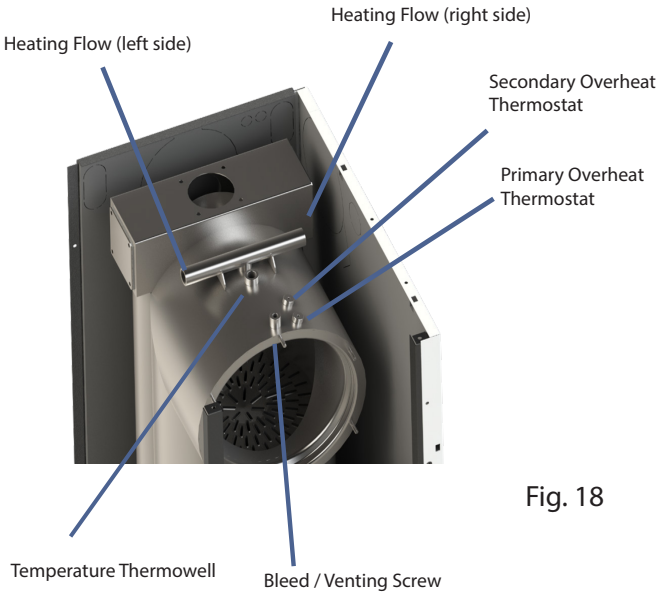

Fig. 18

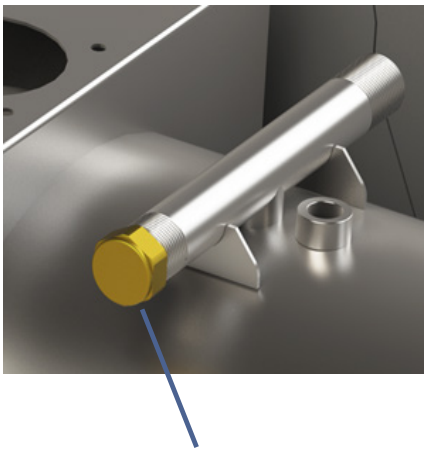

Fig. 19

CAUTION

(Please ensure that the unused Flow Port is sealed using the 3/4" BSP end cap and PTFE tape and jointing compound suitable for Heating Systems)

Return Connections

The Return connection will connect via a 3/4" BSP connection fitting (Fitting supplied) and can be routed out the sides or the rear of the casing. (See Fig 20)

The EOGB Sapphire boiler allows pipework to exit the boiler via pre-cut knock-outs which are located in the rear and both side panels. Push out the 'knock-out' from the required holes, taking care not to distort the side panel. (See Fig 10)

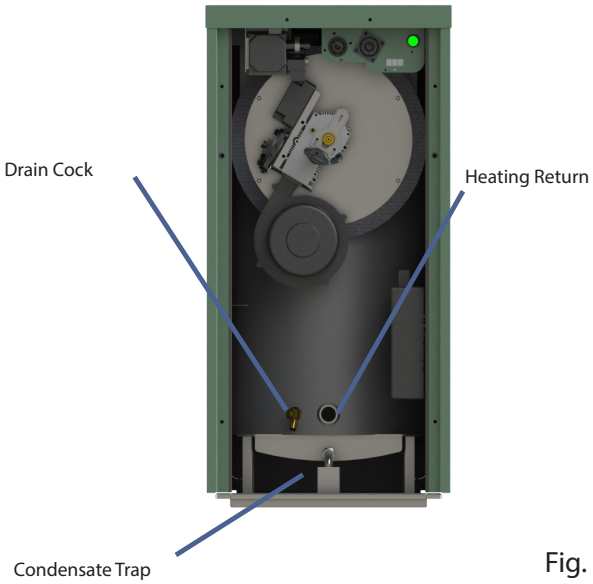

Fig. 20

FLOW / RETURN Pipework Materials

IMPORTANT - The first metre of pipework connected to both the heating flow and return connections of the boiler must be made in copper on all types of system - sealed or open-vented.

CAUTION

If plastic pipe is to be used, after the primary copper pipework, then the installer must check with the plastic pipe manufacturer that the pipe to be used is suitable for the temperature and pressures concerned.

Plastic pipe must be Class S to BS 7291: Part 1:2001.

Drain Cock

A drain cock is pre-fitted to the boiler. (See Fig 20)

Condensate Disposal

8.1 Condensate Trap

When in condensing mode the EOGB Sapphire boiler produces condensate from the water vapour in the flue gases. This water is slightly acidic with a ph. value of around 3. Provision must be made for the safe and effective disposal of this condensate. The EOGB Sapphire External boiler is not provided with a condensate pump as standard but can be purchased if required,
See below images (fig 27) for examples on how to route the condensate discharge but for further information please see the Installers Guide: Condensate discharge pipe installation as published by the HHIC.

Condensate can be disposed of using one of the following methods of connection:

- Internal connection (preferred option):
- Into an internal domestic waste system (from kitchen sink, etc.)
- Directly into the soil stack

External connection:
- Into an external soil stack
- Into an external drain or gulley
- Into a rainwater hopper where permissible (that is part of a combined system where sewer carries both rainwater and foul water)
- Purpose made soak-away - Only use a soak-away where the soil is porous and drains easily. Do not use in clay soils or where the soil is poorly drained.

WARNING

Any damage due to condensate backing up into the boiler due to a high water table, in the case of a soak-away, or flooded drains when the condensate disposal is via a gulley or soil stack, is not covered by the EOGB product warranty.

WARNING

IMPORTANT: Copper or steel pipe is NOT suitable, and MUST NOT be used.

EOGB Sapphire boilers are supplied with a condensate trap to provide the required 75 mm water seal in the condensate discharge pipe from the boiler, with the additional option of purchasing a condensate pump to allow for more condensate run possibilities. This condensate pump can lift the condensate the boiler produces up to 5 meters in height.

Fitting the Condensate Pump - (See Fig 21)

1 x Condensate Trap

1 x 3/4" to 10mm Hose adaptor (Fitted to trap)

1 x PTFE Trap Washer

40cm x 8mm ID Condensate Armoured Flexible hose connection hose (Between trap and pump)

2m x 8mm ID Condensate Armoured Flexible hose (Pump to External Site connection)

2 x 10/12mm pipe clips

1 x 12/14mm pipe clip

WARNING

Figs 22 - 26 offer some example of Condensate Pump Discharge Routes However, please see HHIE – Condensate discharge pipe installation for more guidance or BS5410: Part 1 (Domestic) or Part 2 (Non Domestic) for guidance

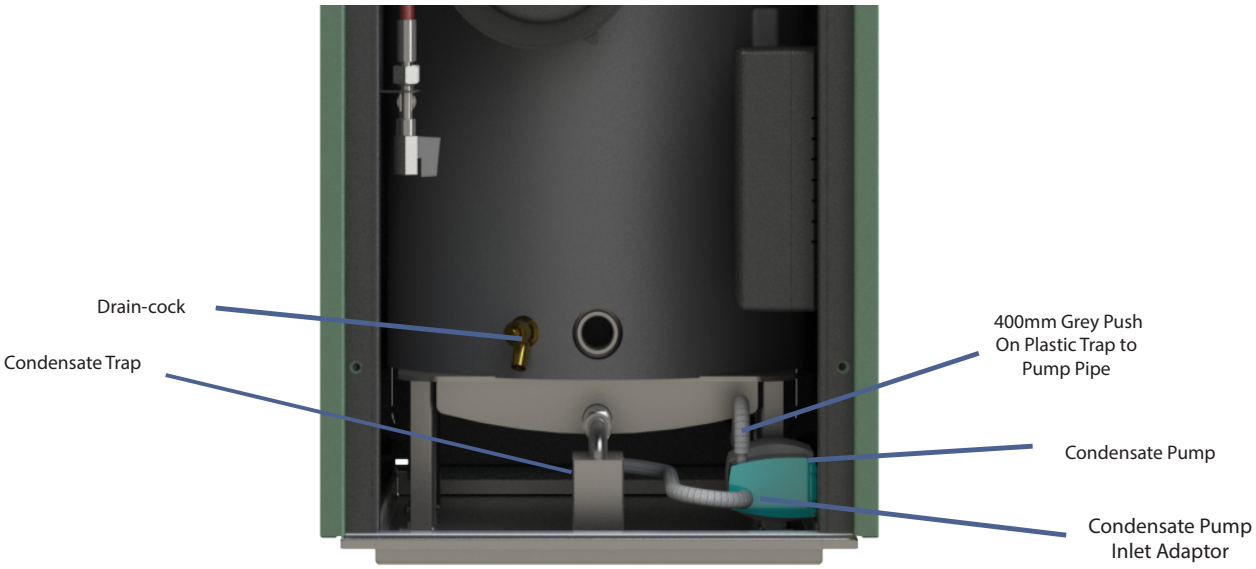

Fig. 21

Condensate Disposal

8.2 Examples of Condensate route options with the use of the supplied condensate pump

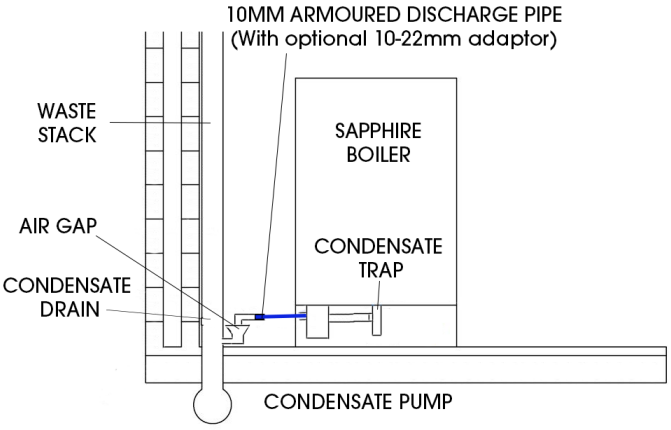

Fig. 22

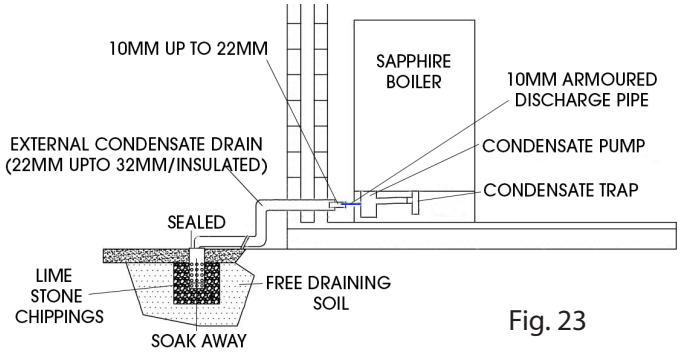

Fig. 23

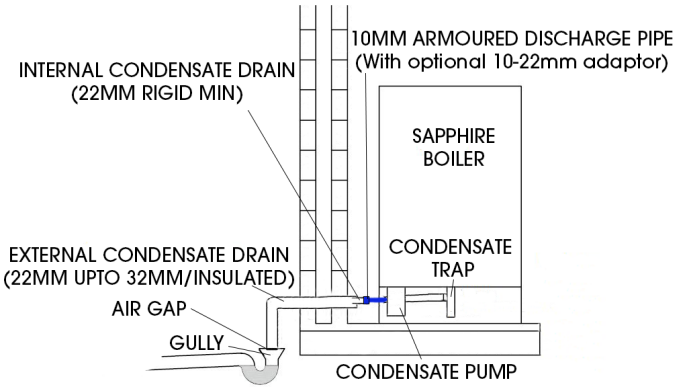

Fig. 24

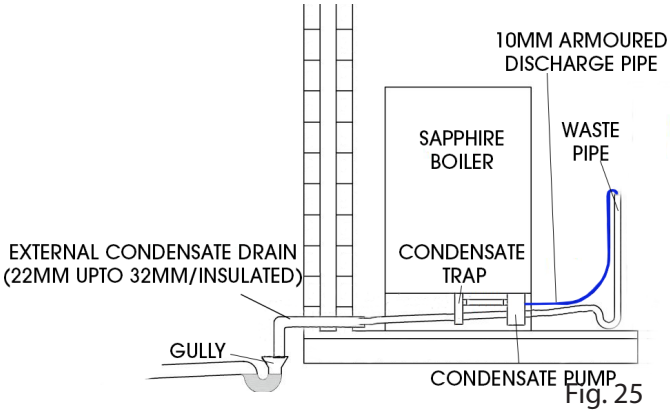

Fig. 25

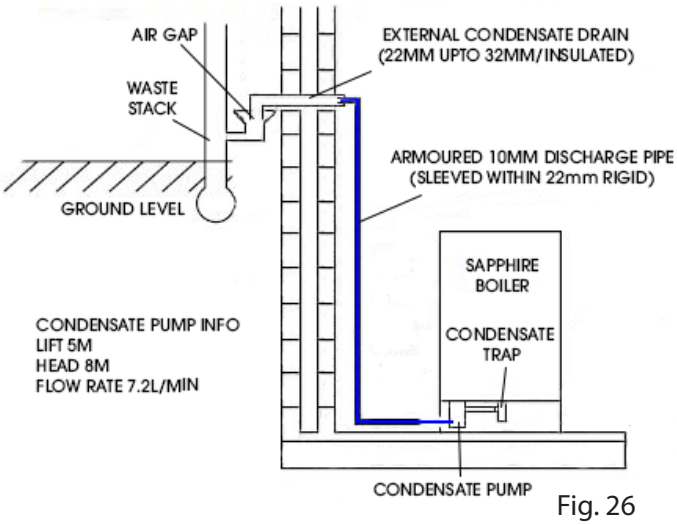

Fig. 26

Condensate Disposal

8.3 Not using the Condensate Pump

If for the Condensate Pump is not required, The condensate discharge pipe can be connected directly to the condensate trap.

Please see below image (Fig. 27) for examples on how to route,discharge the condensate but for further information please see the Installers Guide: Condensate discharge pipe installation as published by the HHIC.

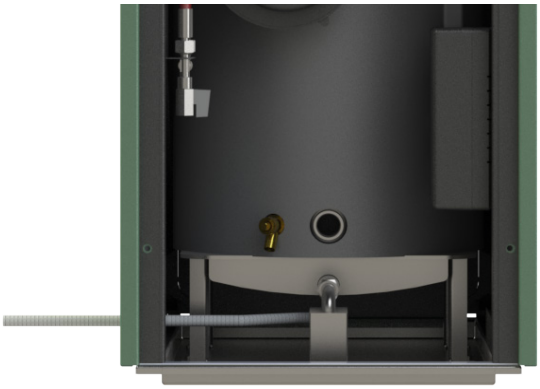

Fig. 27

8.4 Examples of Condensate route options when NOT using the supplied condensate pump

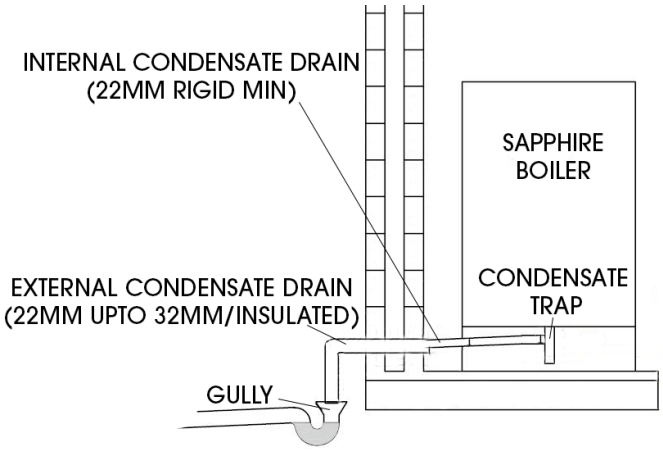

Fig. 28

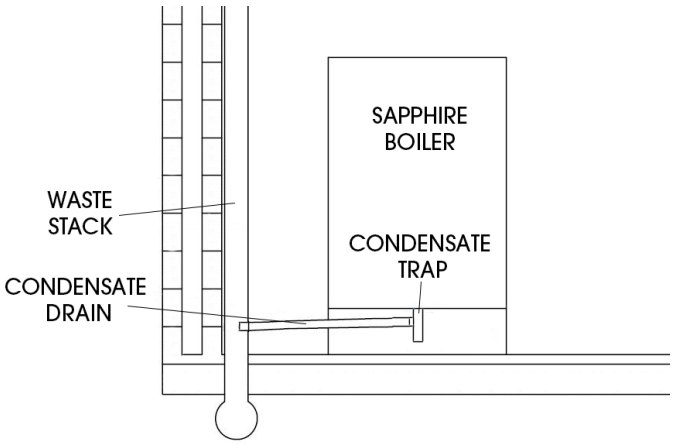

Fig. 29

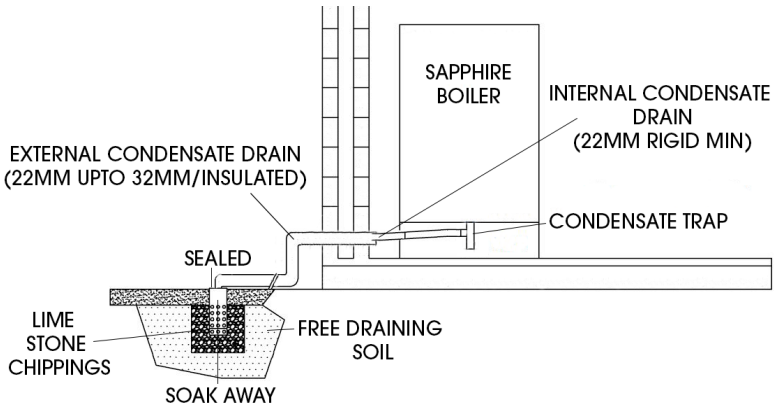

Fig. 30

Fuel Supply and Storage

9.1 Fuel Pump

WARNING

The EOGB Sapphire boiler is fitted with the Danfoss BFPM 61 pump. This pump is pre-set for a two-pipe operation and MUST NOT BE CONVERTED TO A ONE PIPE OPERATION UNDER ANY CIRCUMSTANCES. 1 or 2 pipe operation can only be achieved by following the advice given in section 9.3

Failure to adhere to this requirement will invalidate the boilers warranty

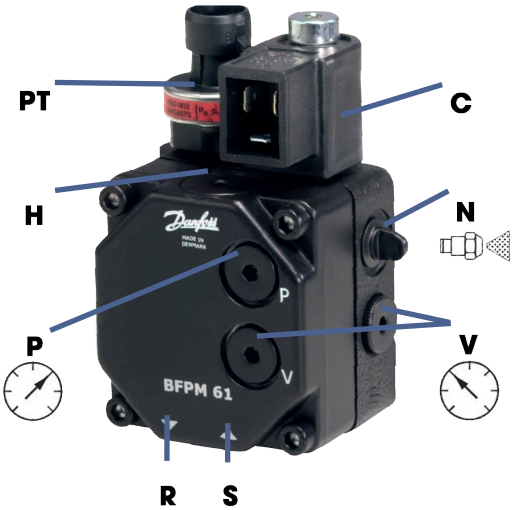

C	-	SOLENOID COIL (NC)
H	-	FILTER
P	-	PRESSURE GAUGE PORT G1/8
PT	-	PRESSURE TRANSDUCER
S	-	SUCTION INLET G1/4
R	-	RETURN OUTLET G1/4
V	-	VACUUM GAUGE PORT G1/4
N	-	NOZZLE LINE PORT

Fig. 31

9.2 Connecting the fuel supply (1 Pipe fuel supply system with standard Sapphire loop system)

It is strongly recommended that in curtain circumstances a deaerator should be used to prevent air build up in the oil line.

WARNING

When connecting a single pipe fuel line supply please use the flexible fuel lines pre-fitted and should be made in accordance with BS5410: Part 1 (Domestic).

The fuel supply line can be routed through the boiler casing via one of the side or rear knock out sections. (SEE FIG 32) and connect on to the Single Pipe Bulk Head Isolation Valve Tee Assembly as shown on FIG 33.

NOTE - The fuel pump does not need to be converted to a 1 pipe system.

Fig. 32

Single Pipe Bulk Head Isolation Valve Tee Assembly

Fig. 33

Connect single pipe fuel supply into the 1/4" BSP Female isolation valve
(1/4" BSP Connection fitting not supplied)

Fuel Supply and Storage

9.3 Connecting the fuel supply (2 pipe fuel supply system)

It is strongly recommended that in curtain circumstances a deaerator should be used to prevent air build up in the oil line.

To connect the two-pipe system a Deaerator is required. The flexible fuel hoses are pre-fitted to the appliance on the burner fuel pump (SEE FIG 34)

Please refer to manufacturer's instructions and OFTEC Technical Book 3 for more guidance on the installation of a two-pipe system.

The fuel supply lines can be routed through the boiler casing via one of the side or rear knock out sections. (SEE FIG 32)

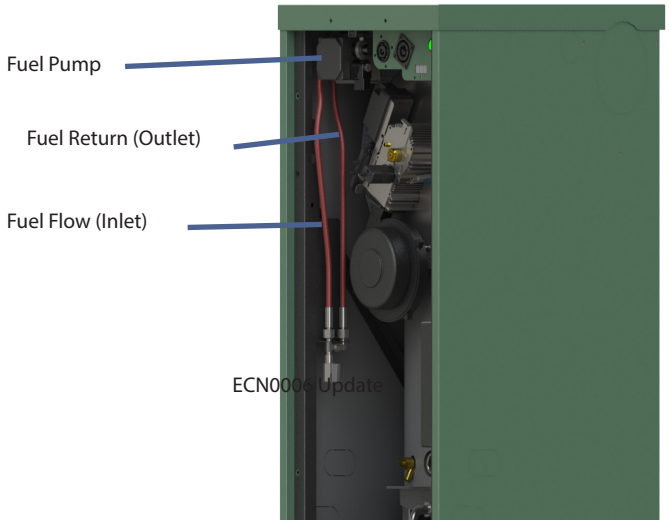

Fig. 34

9.4 Pump warranty

For pumps used outside the stated technical data and used with oil containing abrasive particles Danfoss / EOGB cannot give any warranty.

Note! The solenoid valve must be replaced after 250.000 operations or 10 years (approved life expectancy).

9.5 Fuel Storage

Liquid Fuel storage tanks should be installed to BS5410 Part 1 for Domestic Boilers or Part 2 for Non-domestic Boilers.

9.6 Fuel Supply Pipe Sizing

WARNING

Selection of the correct pipe diameter will depend on the position of the oil storage tank relative to the burner and the length of pipe run. The oil supply pipe should be laid as level as possible to avoid air pockets and unnecessary friction losses. Ancillary equipment such as filters, valves, non return valves and remote acting fire valves as well as the supply line itself should be between the storage tank and burner in accordance with BS5410 Part 1 for Domestic Appliances or Part 2 for Non-domestic Appliances.

For pipe sizing please refer to (Table 3 & 4 Below)

Table 3 is a general guide to determine the maximum allowable pipe run on a Gravity Feed System using the Sapphire Loop System

Table 4 is a general guide to determine the maximum allowable pipe run on a Sub-Gravity Feed System using the Sapphire Loop System or De-Aerator

Table. 3 - Gravity Feed 1 Pipe with Standard EOGB Loop System (Kerosene)

	Maximum Allowable Pipe Run From Tank To Burner (metres)		
Fuel Flow-rate	2.5 (kg/h) (30kW)		
HEAD (metres)	4mm inside dia.	5mm inside dia.	6mm inside dia.
+4.0*	100**	100**	100**
+3.5*	100**	100**	100**
+3.0*	100**	100**	100**
+2.5*	100**	100**	100**
+2.0*	100**	100**	100**
+1.5*	100**	100**	100**
+1.0*	100**	100**	100**
+0.5*	100**	100**	100**

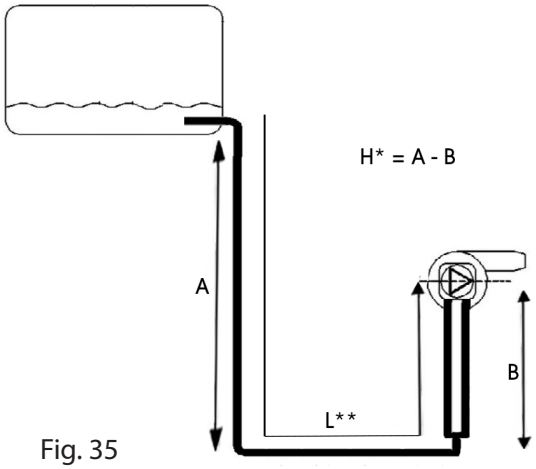

Fig. 35

Table. 4 - Sub-Gravity 1 Pipe Suction Lift with Standard EOGB Loop System or De-Aerator (Kerosene)

	Maximum Allowable Pipe Run From Tank To De-Aerator (metres)		
Fuel Flow-rate	2.5 (kg/h)		
HEAD (metres)	4mm inside dia.	5mm inside dia.	6mm inside dia.
0*	100**	100**	100**
-0.5*	100**	100**	100**
-1.0*	100**	100**	100**
-1.5*	96**	100**	100**
-2.0*	79**	100**	100**
-2.5*	63**	100**	100**
-3.0*	47**	100**	100**
-3.5*	30**	74**	100**
-4.0*	14**	34**	70**

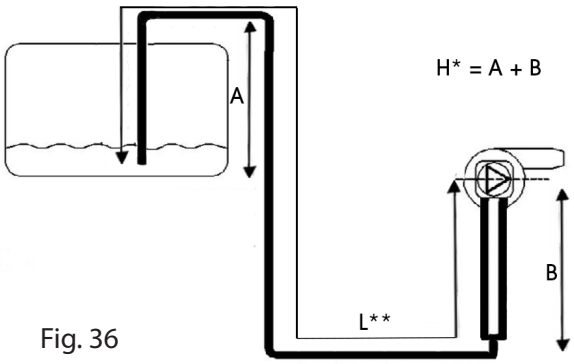

Fig. 36

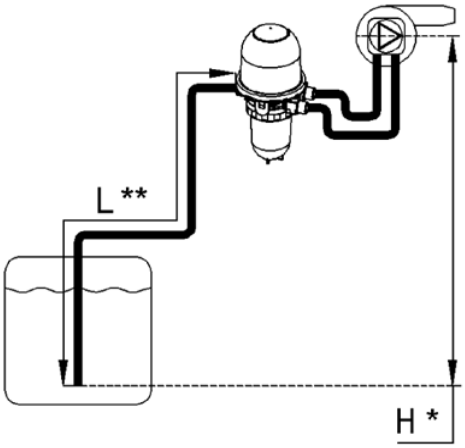

Fig. 37

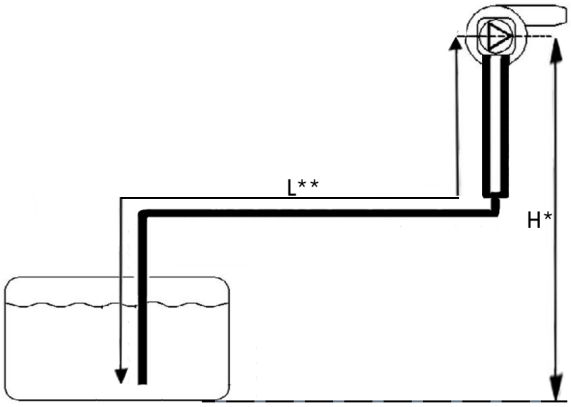

Fig. 38

Fuel Supply and Storage

9.7 Fuel Line Testing

WARNING

Upon completion of the fitting of the fuel supply lines, a pressure test MUST be done to confirm that there are no leaks. Please seek guidance on the pressure test in OFTEC Technical Book 3

IMPORTANT - A De-aerator (if fitted) MUST NOT be connected during pressure testing

9.8 Fuel Filters

As per BS5410 Part 1 for Domestic Boilers or Part 2 for Non-domestic Boilers. You are advised to use additional filters on the fuel supply line. It is recommended that a good quality strainer type fuel filter be fitted at the tank end (no greater than 50 microns) and a secondary paper type filter (less than 15 Micron) to be used to protect the burner pump and nozzle from contamination.

9.9 Fire Valve

A remote sensing fire valve must be installed in the fuel supply line, and comply with BS5410 Part 1.

It must be located outside the boiler casing. The fire valve sensor must be located in the 13mm spring clip above the burner. The fire valve will have a 90°C activation temperature.

9.10 Nozzle

EH and ES Fuel Nozzles can be used.

Sealed Systems

10.1 Sealed System Installation

The EOGB Sapphire boiler is suitable for use with sealed systems complying with the requirements of BS 5449. The maximum temperature of the central heating water is 75°C. The system must also be provided with the following item (Not supplied with the boiler)

- Diaphragm expansion vessel complying with BS 4814.
- Pressure gauge.
- A 3 Bar Pressure Relief Valve.
- Approved method for filling the system.

WARNING

Ensure that the expansion vessel used is of sufficient size for the system volume. Refer to The Domestic Heating Design Guide for sizing the required vessel.
The air pressure in the vessel must be checked annually.

The air charge pressure may be checked using a tyre pressure gauge on the expansion vessel Schrader valve. The vessel may be re-pressurised using a suitable supply of Nitrogen gas, When checking the air pressure the water in the heating system must be cold and the system pressure reduced to zero.

10.2 Heating System Design Considerations

To achieve the maximum efficiency possible from the EOGB Sapphire boiler, the new heating systems should be designed in accordance with BS 5410 Part1 2019 & BS 7593 2019.

For additional guidance please refer to the Domestic Heating Design Guide published by CIBSE.

10.3 Before you fill the system

To avoid the danger of dirt and foreign matter entering the boiler the complete heating system MUST be thoroughly power flushed using cleanser, re filled and treated with suitable corrosion inhibitor in accrdance with BS 7593 2019.

For optimum performance after installation, this boiler and its associated heating system must be flushed in accordance with the guidelines given in BS 7593 "Treatment of water in domestic hot water central heating systems".

10.4 Magnetic Filtration

EOGB requires that at the time of installing this appliance to also install a effective magnetic filter on the return pipework after the last radiator on the heating system. This will maintain maximum operational efficiency and provide protection from damaging long-term effects of "Magnetite" (Black Iron Sludge). It is essential that the filter is sized similar to the return pipework (i.e. 22mm (¾")).

In all circumstances, an effective magnetic filter must be installed in accordance to the manufacturer's instruction

WARNING

Failure to implement these guidelines will invalidate the warranty.

10.5 Filling the Sealed System

An air bleed vent(s) is fitted to the top of the boiler. Check that the vent plug on the top is screwed in fully, then unscrew it one complete turn.

The procedure for filling the sealed system is as follows:

Only ever fill or add water to the system when it is cold and the boiler is off. Do not overfill.

1. Ensure that the flexible filling loop is connected and that the double check shut off valve connecting it to the water supply is closed. A valve is open when the operating lever is in line with the valve and closed when it is at right angles to it.
2. Open the fill point valve.
3. Gradually open the double check valve from the water supply until water is heard to flow.
4. When the needle of the pressure gauge (not supplied with boiler) is between 0.5 and 1.0 bar, close the valve.
5. Vent each radiator in turn, starting with the lowest one in the system, to remove air.
6. Continue to fill the system until the pressure gauge indicates between 0.5 and 1.0 bar. Close the fill point valve.
7. Repeat steps 4 and 5 as required.
8. Check the Pressure Relief Valve (See Section 10.7)
9. Close the fill point and double check valves either side of the filling loop and disconnect the loop

10.6 Venting the Circulating Water Pump (Not Supplied)

It is important that the circulating water pump is properly vented to avoid it running dry and damaging its bearings. Please refer to pump manufacturer's instructions on how to vent the pump.

10.7 Pressure Relief Safety Valve (Not Supplied)

Now the pressure relief safety valve operation must be checked and set. The procedure is as follows:

1. Check the operation of the safety valve by turning the head anticlockwise until it clicks. The click is the safety valve head lifting off its seat allowing water to escape from the system.
2. Check that the water is escaping from the system.
3. Continue to fill the system until the pressure gauge indicates between 0.5 and 1.0 bar.
4. Close the fill point valve and check the system for water soundness, rectifying where necessary.
5. Water may be released from the system by manually operating the safety valve until the system design pressure is obtained. The system design pressure (cold) should be between 0.5 bar and 1.0 bar. The pressure is equivalent to the maximum static head in bar + 0.3 (1 bar = 10.2 metres of water), where the static head is the vertical height from the centre of the expansion vessel to the highest point of the system.
6. Now close the valves either side of the filling loop and disconnect the loop.

Electrical

11.1 General

The EOGB Sapphire boiler requires a 230/240 V ~ 50 Hz supply. It must be protected by a 3 Amp fuse.

DANGER

The EOGB Sapphire boiler contains electrical switching equipment and must be earthed.

The supply must be fused at 3 Amp and there must only be one common isolator for the boiler and control system, providing complete electrical isolation.

A fused double pole switch or a fused three pin plug and shuttered outlet socket should be used for the connection.

All the wiring and supplementary earth bonding external to the boiler must be in accordance with the current I.E.E. Wiring Regulations.

As the boiler/burner uses OpenTherm controls, no additional room thermostat or timers are required.

In the event of an electrical fault after installation of the boiler, the following electrical system checks must be carried out:

- Short circuit
- Polarity
- Earth continuity
- Resistance to earth

11.2 Connecting the Power Supply

It is recommended that the boiler should be connected to a switched mains power supply from an OpenTherm control system.

Ensure that the route and length of the supply cable is such that the boiler door can be easily removed without disconnecting the supply cable from the EOGB Sapphire Wiring Centre.

The procedure is:

1. Remove the boiler door, if it has not already been removed.
2. Route the supply 3 core cable through the access hole in the rear or side panel on where to place the mains incoming supply cable.
3. Connect the 3 core mains supply cable to the EOGB Sapphire wiring centre that is located under the top cover of the boiler casing.
4. Wire as per Fig 40
5 Ensure that all external wiring is adequately supported

DANGER

Do not switch on the electricity supply at this stage.

11.3 OpenTherm Controls

OpenTherm is the name given to a form of communication of information between modulating (condensing) central heating appliances and room thermostats. It sets the rules as to how the appliance and room thermostat communicate with each other.

Modulating control is a method of control used by modern heating systems in the UK. Instead of switching a boiler on and off at intervals, modulating control allows the amount of heat provided by the boiler to be controlled to match the varying demand signal.

EOGB have recognised the energy savings potential of modulating control and have designed the first modulating liquid fuel boiler of its type to work with OpenTherm controls.

How does OpenTherm work?
The standard way to control a heating system is to switch the boiler on and off at intervals with On/Off controls. OpenTherm provides more precise control on the boiler through the control of the EOGB Sapphire modulating blue flame burner. It allows the amount of heat provided by the burner to be controlled to match the varying demand signal. By reducing the flow temperature to a minimum as it leaves the boiler, OpenTherm modulation helps the boiler efficiency by running at lower flow temperatures for longer periods; this ensures more of the heat exchanger is at condensing temperatures.

The EOGB Sapphire boiler is compatible with any OpenTherm multi zone system.

11.4 OpenTherm Wiring

Please consult the Manufacturers OpenTherm instructions on where to obtain the OpenTherm signal that is to be wired to the boiler. Once obtained, wire the signal into the EOGB Sapphire wiring centre on terminals 6 and 7 using an independent 2 core screened cable.

11.5 Modulating Circulating Pump (Wiring)

On the EOGB Sapphire boiler, an external modulating circulation pump will need to be wired into the EOGB Sapphire wiring centre on terminals 8, 9 and 10 (See Fig 40)

External Wiring Diagram

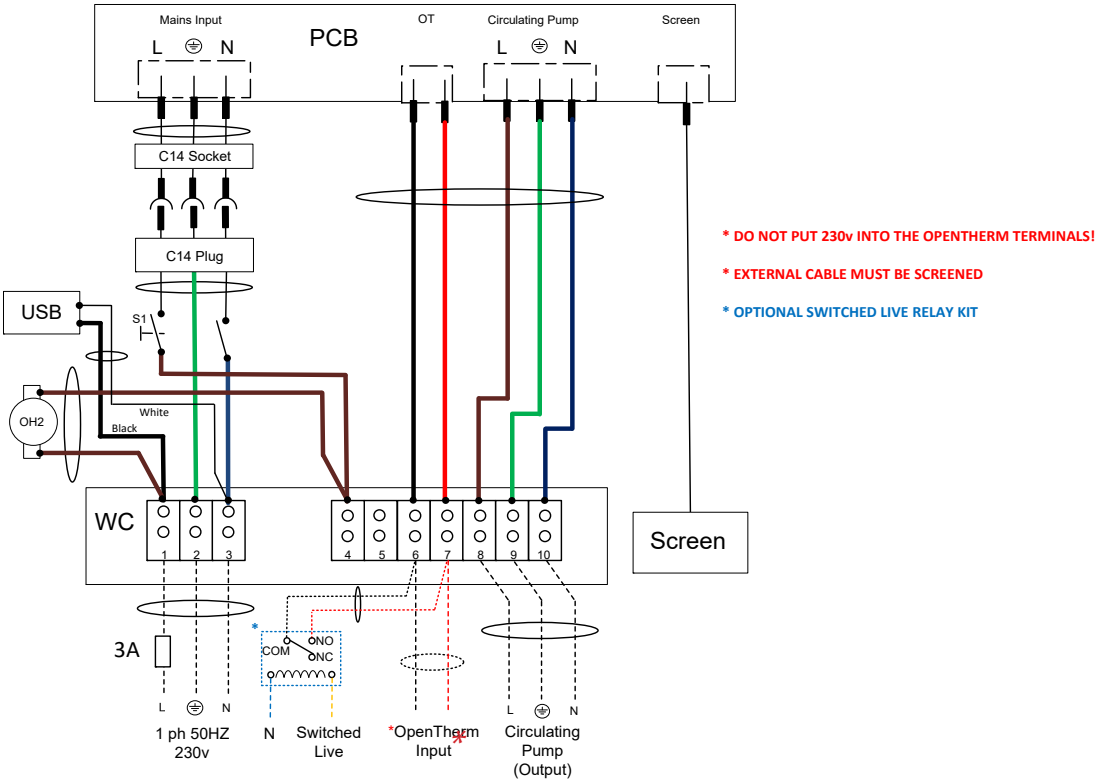

Internal Wiring Diagram (Sapphire PCB Connections)

Fig 40

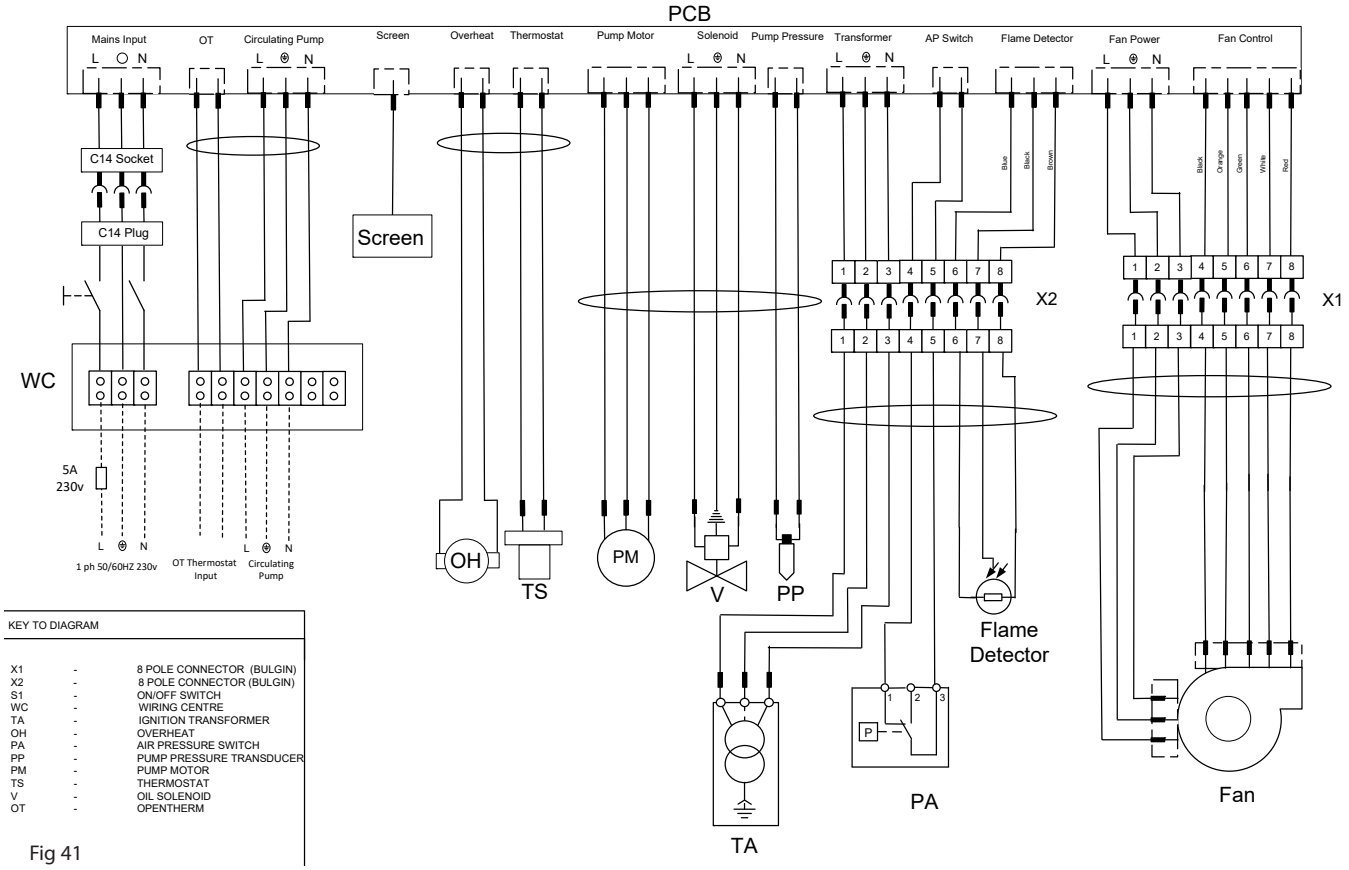

Fig 41

Product Fiche

It has been concluded that:

- The full and part load efficiency test results obtained are deemed to satisfy the requirements of the Boiler Efficiency Directive (92/42/EEC).

- The appliance is deemed to satisfy the minimum efficiency requirements of the Commission Delegated Regulation (EU)

No Commission Regulation (EU) No 813/2013 of 2 August 2013 implementing Directive 2009/125/EC of the European Parliament and of the Council with regard to ecodesign requirements of space heaters and combination heaters.

	Symbols	Unit	EOGB Sapphire 6 - 32 kW
Condensing boiler			Yes
Low temperature boiler			No
B1 boiler			No
Combination heater			No
Rated heat output	P rated	kW	32
Useful heat output			
Useful heat output @ heat rated output kW	P_4	kW	32
Useful heat output @ 30% of heat rated output kW	P_1	kW	6
Auxiliary electricity consumption			
At full load	elmax	kW	0.133
At part load	elmin	kW	0.027
In standby mode	P_{SB}	kW	0.006
Useful efficiency			
Useful efficiency @ heat rated output kW	ŋ4	%	92.51
Useful efficiency @ 30% of heat rated output kW	ŋ1	%	97.51
Other Items			
Standby heat loss	P_{stby}	kW	0.049
Seasonal space heating energy efficiency	ŋs	%	92
ErP Energy efficiency class			A
Sound power levels	L_{WA}	dB	56.1
Emissions of nitrogen oxides	NO_x	mg/kWh	65
Annual energy consumption	Q_{HE}	GJ	72.71

Table 5

Completion

Please ensure that an installation report is completed in full. Leave the top copy with the User. Retain the carbon copy.

CAUTION

ONCE THE INSTALLATION HAS BEEN COMPLETED, AN APPROVED SAPPHIRE SERVICE AND COMMISSIONING ENGINEER MUST CARRY OUT THE COMMISSIONING – See "EOGB Service & Commissioning Manual"

End of Life Information

GENERAL
EOGB Energy Products Ltd liquid fuel appliances incorporate components manufactured from a variety of different materials. The majority of these materials can be recycled.

Materials that cannot be recycled must be disposed of according to local regulations using appropriate waste collection and/or disposal services.

DISASSEMBLY
There is little risk to those involved in the disassembly of this product. Please refer to and follow the Health and Safety Information given in the User Manual provided with the appliance.

RECYCLING
Many of the materials used in EOGB Sapphire liquid fuel boilers can be recycled, these are listed below:

COMPONENT	MATERIAL
Outer casing panels	Mild steel (polyester powder coated)
Heat exchanger	Stainless steel
Pipework	Copper
Burner body/flange	Aluminium alloy
Burner oil pump	Aluminium alloy/steel
Electrical wiring	Copper/plastic
Thermostats	Copper/plastic
Printed Circuit boards	Copper/plastic

DISPOSAL

All materials other than those listed above must be disposed of responsibly as general waste according to local regulations by using a public or private waste collection service.

EOGB

Reliable energy. Flexible approach.

EOGB Energy Products Ltd, 5 Howard Road, Eaton Socon, St Neots, Cambridgeshire PE19 8ET

Tel: 01480 477066 Fax: 01480 477022 Email:sales@sapphireboilers.co.uk
www.sapphireboilers.co.uk

YouTube www.youtube.com/EOGBenergyproducts

@EOGBburners